CENTRIFUGAL PUMP

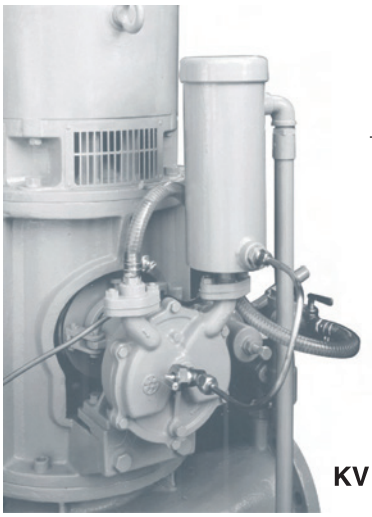

KV MODEL

CENTRIFUGAL PUMP
KV Model

用途/Service

* バキュームポンプ
* その他

* Vacuum Pump
* Others

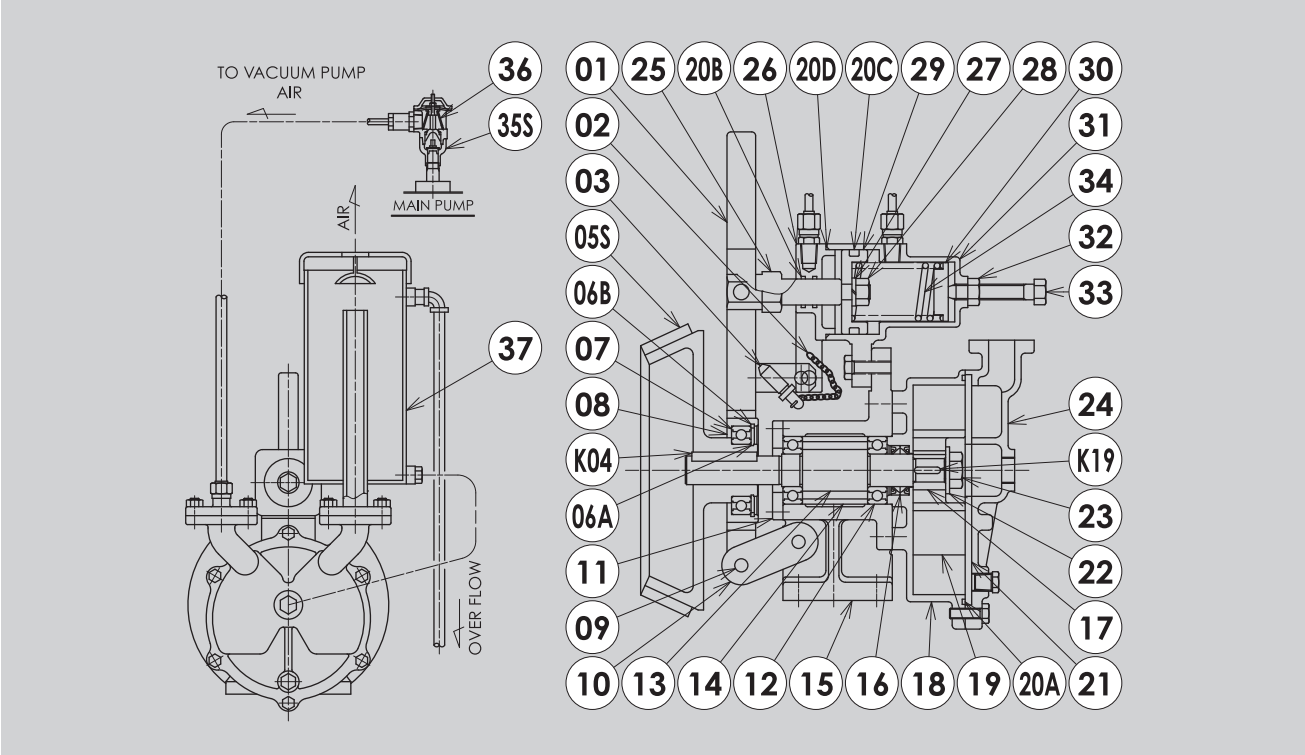

PART NO.	NAME OF PART	MATERIAL NOMINATION	QTY.
01	Clutch Handle	Mild Steel	1
02	Chain	Mild Steel	1
03	Set Pin	Mild Steel	1
04	Friction Pulley	Cast Iron	1
05	Clutch Facing	Rubber	1
06A	Retaining Ring	Carbon Tool Steel	1
06B	Retaining Ring	Carbon Tool Steel	1
07	Ball Bearing	High Carbon bear Steel	1
08	Bearing Holder	Mild Steel	1
09	Pin	Mild Steel	3
10	Connecting Piece	Cast Iron	1
11	Bearing Case Cover	Cast Iron	1
12	Ball Bearing	High Carbon bear Steel	2
13	Shaft	Stainless Steel	1
14	Spacer	Carbon Steel	1
15	Bearing Case	Cast Iron	1
16	Oil Seal		2
17	Liner	Brass Plate	1
18	Casing	Bronze Casting	1
19	Runner	Bronze Casting	1
20A	O Ring	Synthetic Rubber	1
20B	O Ring	Synthetic Rubber	2

PART NO.	NAME OF PART	MATERIAL NOMINATION	QTY.
20C	O Ring	Synthetic Rubber	1
20D	O Ring	Synthetic Rubber	1
21	Side Plate	Bronze Casting	1
22	Lock Washer	Stainless Steel	1
23	Runner Nut	Brass	1
24	Casing Cover	Bronze Casting	1
25	Auto. Valve Spindle	High Tension Brass	1
26	Auto. Valve Cover	Bronze Casting	1
27	Lock Washer	High Carbon Steel Wire Rod	1
28	Nut	Brass	1
29	Auto. Valve	Bronze Casting	1
30	Spring Guide	Brass	1
31	Auto. Valve Cylinder	Bronze Casting	1
32	Nut	Brass	1
33	Adjusting Spindle	Brass	1
34	Auto. Valve Spring	Stainless Steel	1
35S	Auto. Air Valve Complete	Bronze Casting	1 Set
36	Valve Spring	Phosphor Bronze Wire	1
37	Separate Tank	Carbon Steel	1
K04	Key For Clutch	Stainless Steel	1
K19	Key For Runner	Stainless Steel	1